www.ema-electronic.com

07 SERIES

Vibrating fork level limit switches

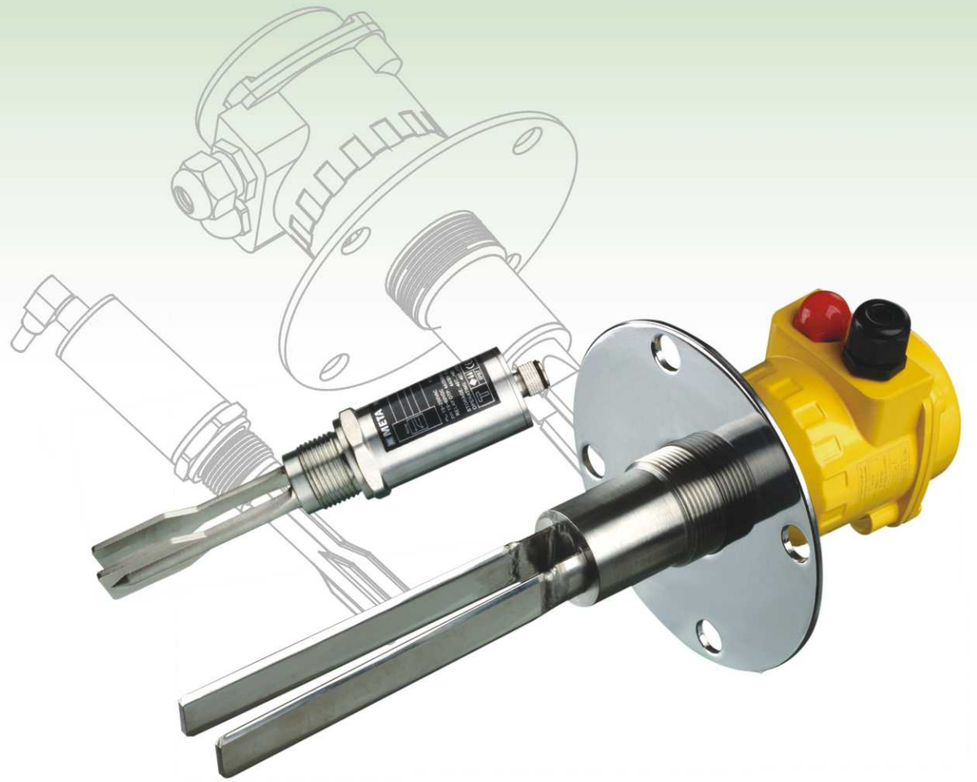

IP67 CE ISO 9001:2000 SGS RoHS

Cata. No. : C0708E-A



Features

- Thorough metal construction, sturdy and durable.
- No calibration necessary, user friendly handling.
- Large vibrating range and the amplitude up to 8mm for the weak sticky materials hanging on the fork.
- Adjustable amplitude for distinguishing from the density of different substances.
- Ultra red LED offers an immediate warning for the operator to control the measurement.
- Flexible AC, DC power input makes not only less inventory but wide application.
- Various output modes, flexible use.
- Suitable for measurement of level of liquid, particulate and dense materials.
- Protection Classification: IP67
- EU RoHS Compliance (NO.EMA06N022-01CTSP)
- Certification: CE (NO. EMA-0611-5880-CE/SAFETY)

Operating principle

Shock wave, generated by piezodielectric elements, through metallic conductance, is transmitted to vibration rod to make it vibrate. In case of any materials or liquids completely covering the vibration rod, the vibration rod will stop vibrating and output a contact signal. (Relay, NPN, PNP) if the materials or liquids didn't cover the vibration rod completely, then the vibration rod will output certain amplitude in the proportion of being covered. Output signal generates analog signal. (4-20mA, 0-10V) analog output is applied in a circumenstance, in which the misoperation could be cased because of the violent frothing that occurs.

07 SERIES
www.ema-electronic.com
Vibrating fork level limit switches

Application

Suitable for chemical plastics, pharmacy, feed, cement, fertilizer, food or other solid and liquid industries.



Standard VR 1000 specifications

- Power input: 20~250VAC
  20~60VDC
- Electricity consumption: AC 7.5W/DC 1.8W Max.
- Connection mode: Fixture, Flange
- Connection box: aluminum alloy
- Cable gland: 7.5mm
- Available proportion: 5g/L
- Output mode: 1. Relay - SPDT 4A/250VAC
  4A/60 VDC
  2.NPN/PNP - 800mA
  3. 0~10VDC , 4~20mA
- Protection Classification: IP67
- Operation temperature: -40℃~150℃

Structure

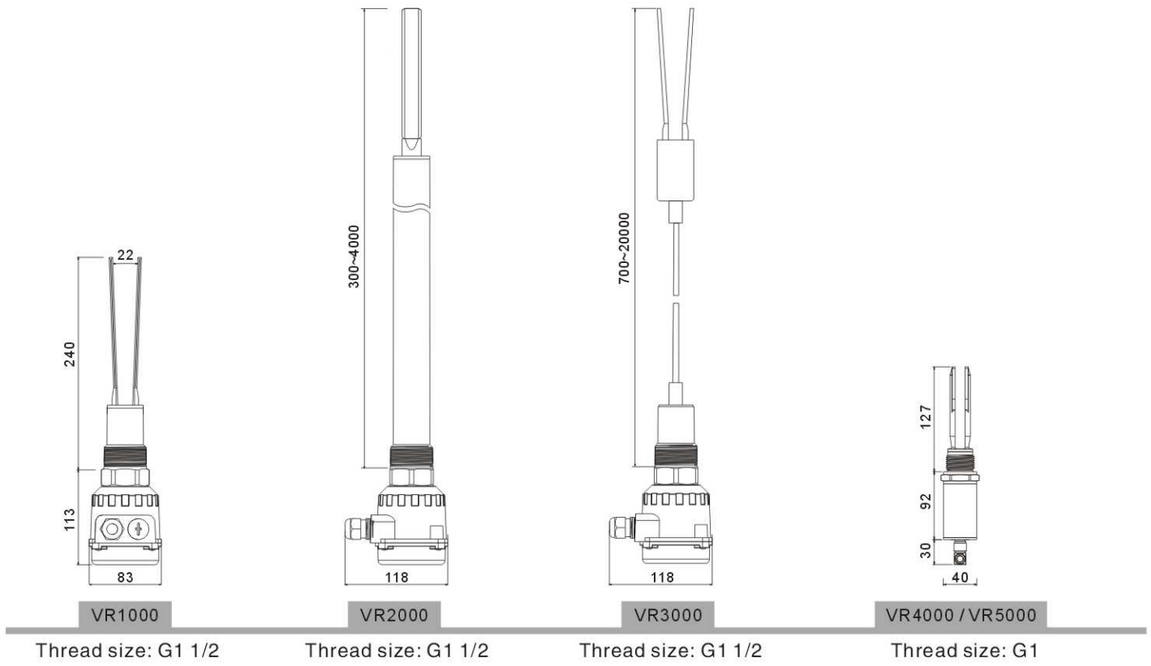

VR1000~VR3000 Terminal Drawing

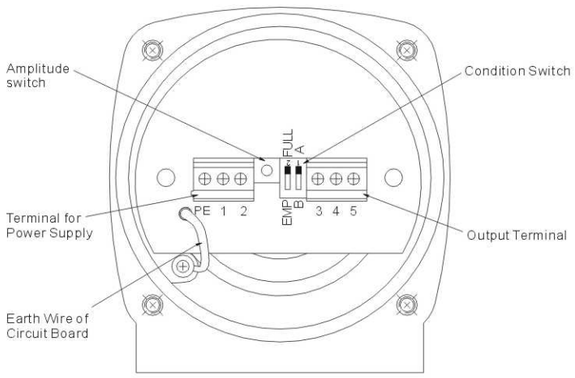

There are two suits of DIP Switch, the left suit is switch 2 and the right one is switch 1.Switch 2: condition explanation:
FULL position: If the level sensor is used to indicate the full loaded condition of materials, then please place the switch in FULL position.
EMP position: If the level sensor is used to indicate the empty condition of materials, then please place the switch in EMP position.

07 SERIES
www.ema-electronic.com
Vibrating fork level limit switches

VR1000~VR3000 High and low position setting adjustment

Level status	High position		Low position	
Switch 2	FULL	EMP	FULL	EMP
Relay OUT	3 4 5	3 4 5	3 4 5	3 4 5
NPN OUT	1 4	1 4	1 4	1 4
PNP OUT	2 3	2 3	2 3	2 3
4-20mA OUT	I= 20mA	I= 4 mA	I= 4mA	I= 20mA
0-10VDC OUT	U=10V	U=0V	U=0V	U=10V
Indicator	☼	⊗	⊗	☼

1. The terminal " 4 " in the table is the public end of the relay and can be connected to the " +" anode of AC or DC power input.
2. NO and NC condition of the relay is determined by the position of the " switch 2 ".
3. Switch 1 is designed for signal boost up purpose for over 1500mm(L) vibration rod of VR2000 & VR3000 series only - "A" intensive, "B" normal. (This switch might be disable when the vibration rod is less than 1500mm.)

VR1000~VR3000 Hookup

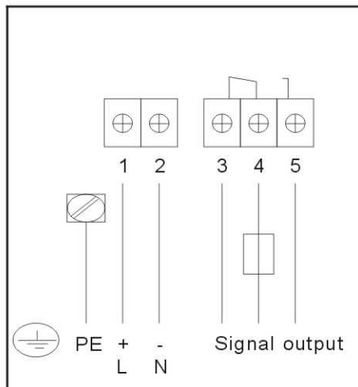

Relay output:

Power input	20~250VAC 50~60Hz 20~60VDC
Signal output	4A/250VAC Max. 4A/60VDC Max.

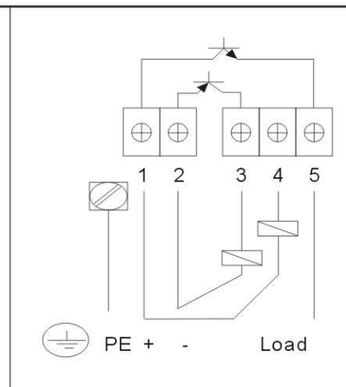

NPN/PNP output:

Power input	20~60VDC
Signal output	800mA Max.

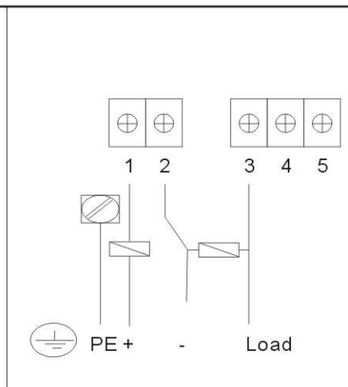

2 wire 4~20mA output:
3 wire 0~10V output:

Power input	24VDC±10%
Load	4~20mA output: 500Ω Max. 0~10V output: 2KΩ Min.

VR4000 / VR5000 Terminal Drawing

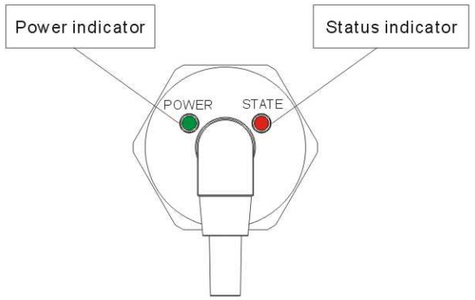

Pig. A

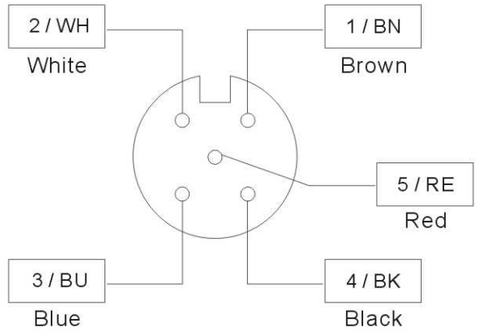

Pig. B

VR4000 / VR5000 Status Indicators

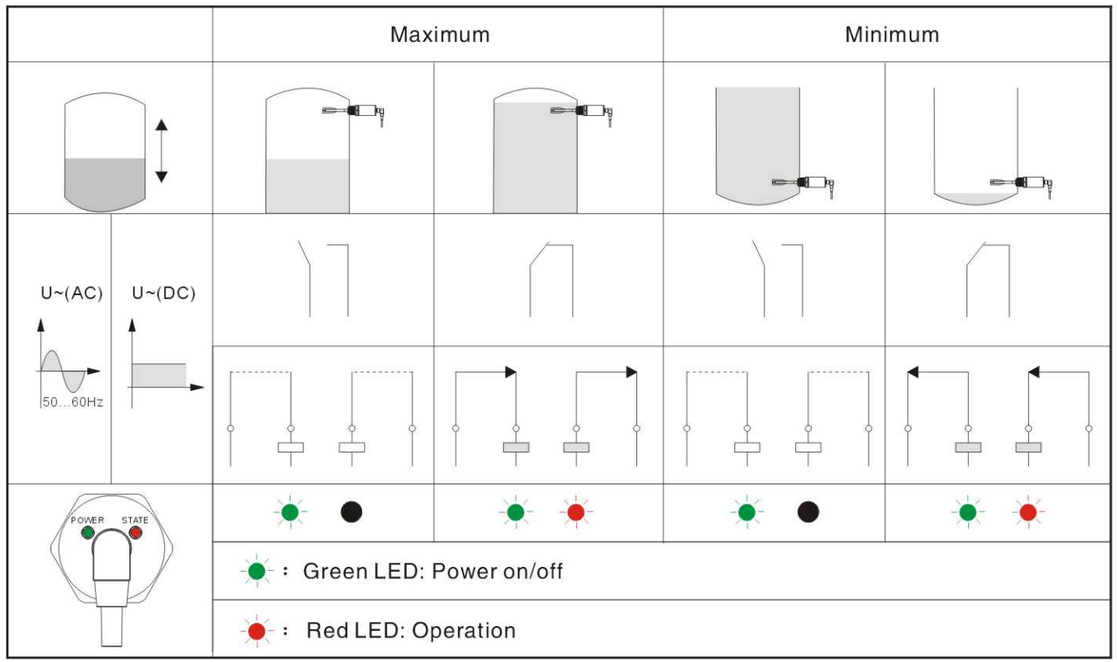

07 SERIES
www.ema-electronic.com
Vibrating fork level limit switches

VR4000 / VR5000 Hookup

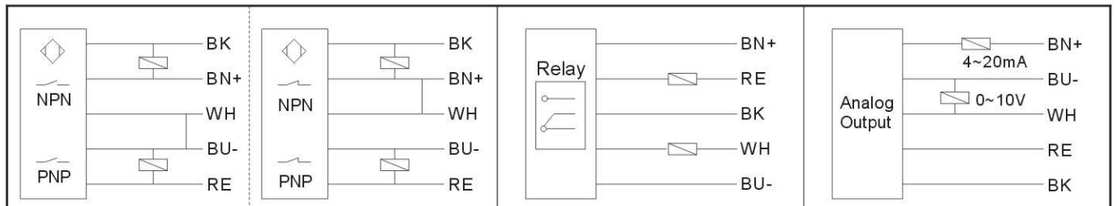

NPN/PNP output:		Relay output:		2 wire 4~20mA output: 3 wire 0~10V output:	
Power input	20~60VDC	Power input	20~250VAC 20~60VDC	Power input	24VDC±10%
Signal output	800mA Max.	Signal output	4A/250VAC Max. 4A/60VDC Max.	Load	4~20mA output: 500Ω Max. 0~10V output: 2KΩ Min.

Accessories specifications and order number

Cable order number



PS. For VR4000 / VR5000

C	02	L	5	C	12
C: Cable	Length: 02: 2M 05: 5M 10: 10M	Connector: I: Straight L: Angle	Pin: 4: 4 5: 5	Materials: R: PUR C: PVC	Connector size: 12: M12

	Flange	Fixture
VR1000 VR2000 VR3000	Order No. 0607F	Order No.0607X
VR4000 VR5000	Order No. 0608F	Order No.0608X

Order example

VR	2	02K	33	2	S	T
Series	VR2000 Extention	2000mm	20~60VDC	Flange	Standrad type	Teflon

VR	Series: VR
2	Fork type: 1: VR1000 Standard, L=240 mm 2: VR2000 Extention, L=300mm~4000mm 3: VR3000 Extention with cable, L=700mm~20000mm 4: VR4000 Mini, L=127mm (for liquid) 5: VR5000 Mini, L=127mm (for solid)
02K	Fork length: For VR1000 & VR4000 / VR5000, this blank is 000. For VR2000 & VR3000, this blank should be filled in according to the length of the switches. It should be displayed by K if the length is over 1000mm. (EX.1000mm=01K ; 2500mm=2K5)
33	Power input: 1: 20~60VDC & 20~250VAC 50~60Hz (Relay output SPDT 4A/250VAC or 4A/60VDC) 2: 24VDC ± 10% (4~20mA & 0–10VDC output) 3: 20~60VDC (NPN & PNP output)
2	Mounting method: 1: G1–1/2"–n11 thread for VR1000~VR3000 2: Flange(thread for VR1000~VR3000) 3: Fixture(thread for VR1000~VR3000) 4: G1 thread for VR4000 / VR5000
S	Protection type: S: Standard type
T	Fork materials: 4: 304 stainless steel – for week acidic or alkalescent substances 6: 316 stainless steel – for hygienic or foodstuff substances T: Stainless steel with Teflon – for strong acidic or alkali substances

07 SERIES
www.ema-electronic.com
Vibrating fork level limit switches

Installation

1.The preferred installation for reducing the shock to materials and the hanging of materials is making the switch at an angle of 15-20 to horizontal.
2.Keep the switches away from the feed opening of the barrel to reduce the shock to materials, if unavoidable, a separator plate is necessary.
3.The inlet of the connection box should be downward and the fixing nuts of power line must be tightened.
4.The operators cannot use vibration rod to climb or hook any object when working within the barrel.

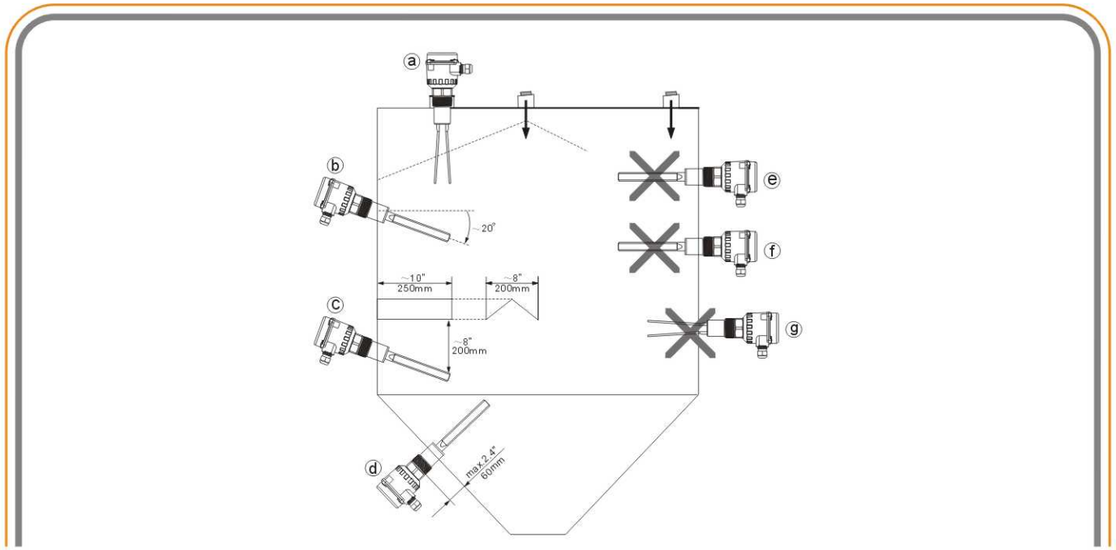

Correct mounting:

ⓐ Top installation
Fork is vertical towards bottom and mounted in any position far away from the feed opening of top side.

ⓑ Side installation
Fork angled slightly downwards by 15~20 degree so as to reduce the shock and the hanging of the flowing materials.

ⓒ Side installation with shield
With a shield, length approx.10"(250mm), width approx.8" (200mm), folk angled slightly downwards by 15~20 degree so as to reduce the shock of the float materials and prevent the improper stock from itself.

ⓓ In discharge hopper
Max. Nozzle length 2.4" (60mm), so that no build-up occurs which prevents the fork from oscillating.

Incorrect mounting:

ⓔ Side installation in filling curtain or under the feed opening.

ⓕ Incorrect fork orientation
The fork is subjected to high load caused by falling material, malfunction due to residual material.

ⓖ The switch do not work when the distance of mounting nozzle and barrel is over 2.4"(60mm).

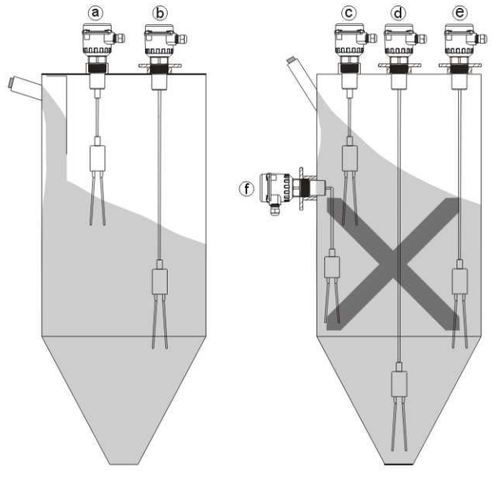

Correct mounting:
ⓐ Next to the silo wall with proper distance from falling material.
ⓑ Avoid of the false warning from material flow.

Incorrect mounting:
ⓒ Too close to the wall and material build-up.
ⓓ In the center of the discharge hopper.
ⓔ In filling curtain.
ⓕ Laterally mounted (Extention type with cable).

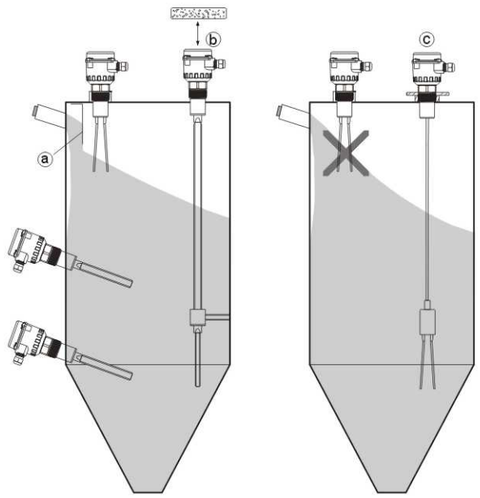

ⓐ Protective cover to protect against falling material.
ⓑ Sufficient space for mounting and for adjustment.
ⓒ Protective shield against condensation in the housing.

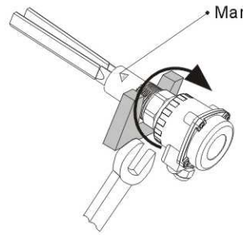

The top of the fork is marked.

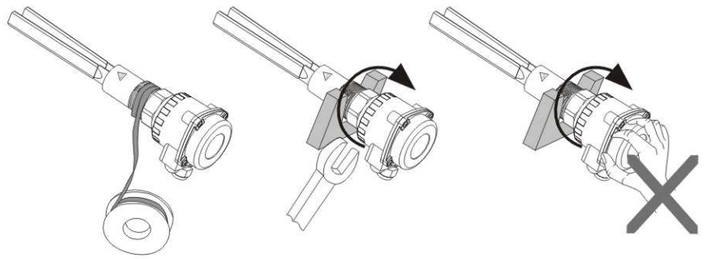

Enclosed by PTFE thread seal tape.
Tightened by a wrench.
Not wrested by hands.

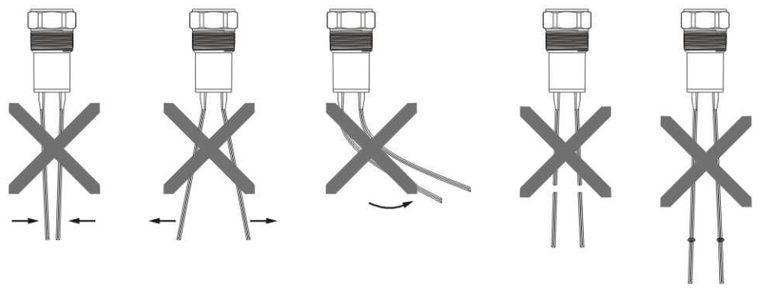

Do not
damage the fork;
bend the fork;
shorten the fork;
and lengthen the fork.